compact duo

portable electronic organ

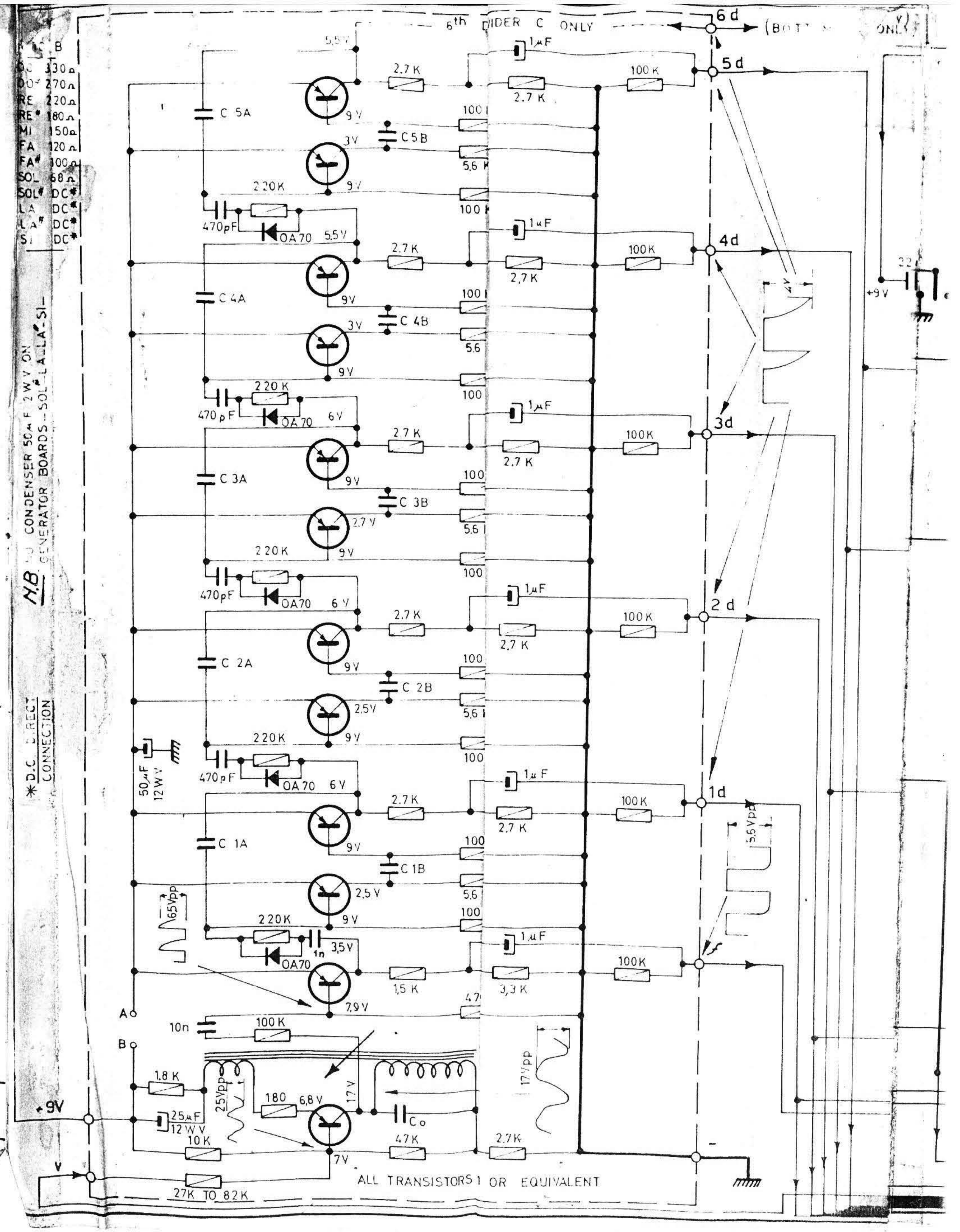
B
DO 330 Ω
DO# 270 Ω
RE 220 Ω
RE# 180 Ω
MI 150 Ω
FA 120 Ω
FA# 100 Ω
SOL 68 Ω
SOL# DC*
LA DC*
LA# DC*
SI DC*
N.B. NO CONDENSER 50 μF 12 W.V. ON GENERATOR BOARDS - SOL# - LA - LA# - SI -
* D.C. DIRECT CONNECTION
6th DIVIDER C ONLY
(BOTTOM ONLY)
6 d
5 d
4 d
3 d
2 d
1 d
C 5A
C 5B
C 4A
C 4B
C 3A
C 3B
C 2A
C 2B
C 1A
C 1B
220 K
470 pF
OA 70
1 μF
2,7 K
100 K
100
5,6 K
5,5 V
9 V
3 V
6 V
2,7 V
2,5 V
3,5 V
7,9 V
1n
1,5 K
3,3 K
47
50 μF 12 WV
65 Vpp
5,5 Vpp
10n
100 K
A
B
1,8 K
25 μF 12 WV
25 Vpp
180
6,8 V
17 V
17 Vpp
Co
10 K
47 K
2,7 K
7 V
+9V
V
27 K TO 82 K
ALL TRANSISTORS 1 OR EQUIVALENT
+9V
22

D.W.G. No	**FARFISA** — ASPIO TERME — ANCONA — ITALY —
SM-62	SCHEMATIC DIAGRAM FOR
25.5.66	MODEL COMPACT DUO

KG

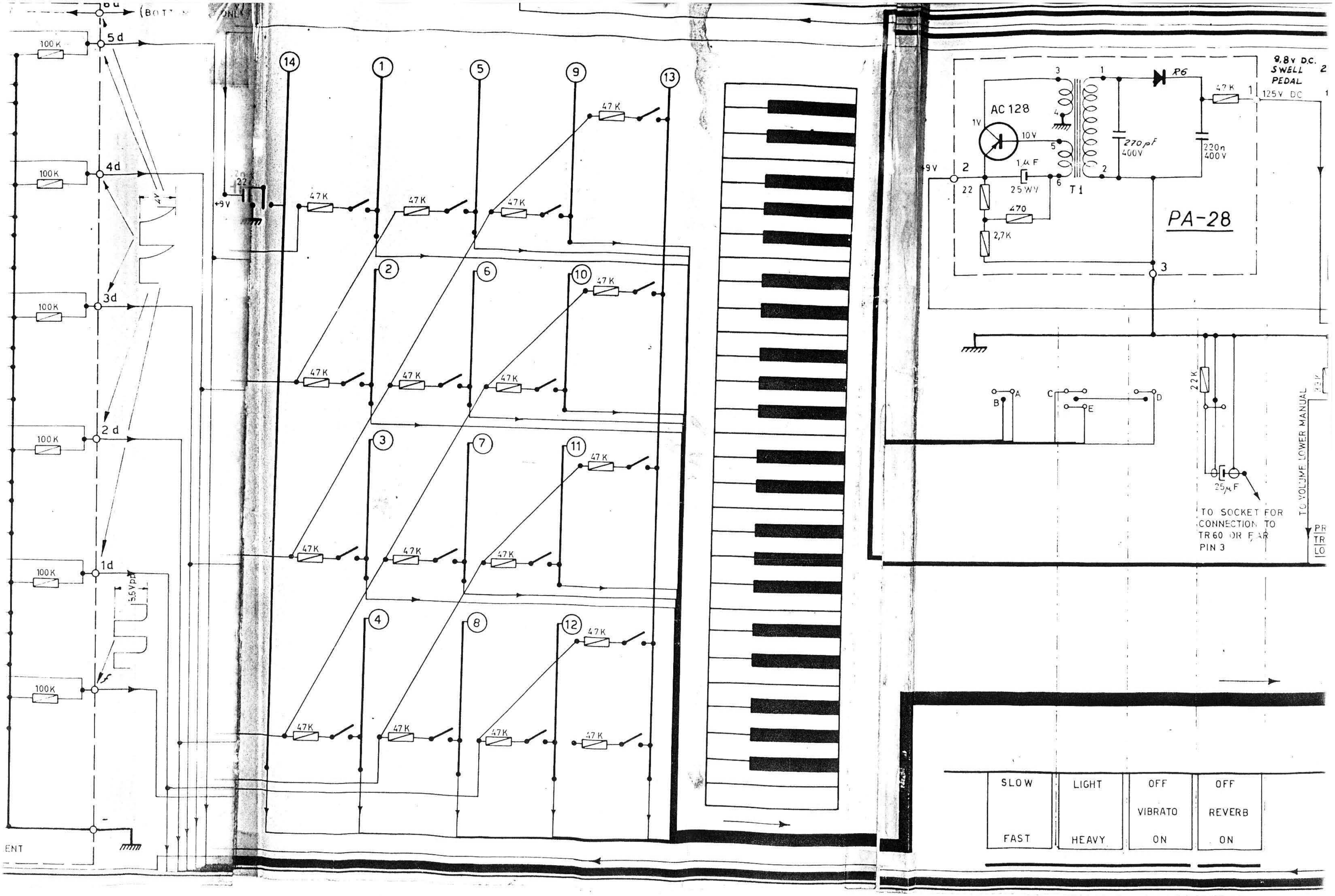
6d
(BOTT... ONLY)
5d
4d
3d
2d
1d
100K
4V
5,6Vpp
ENT
+9V
22
47K
14
1
5
9
13
2
6
10
3
7
11
4
8
12
AC 128
1V
10V
1µF
25WV
470
2,7K
+9V
2
3
4
5
6
1
T1
R6
270pF
400V
220n
400V
47K
9,8V D.C.
SWELL
PEDAL
125V DC
PA-28
A
B
C
D
E
22K
25µF
TO SOCKET FOR CONNECTION TO TR60 OR EAR PIN 3
TO VOLUME LOWER MANUAL
PR
TR
LO
SLOW
FAST
LIGHT
HEAVY
OFF
VIBRATO
ON
OFF
REVERB
ON

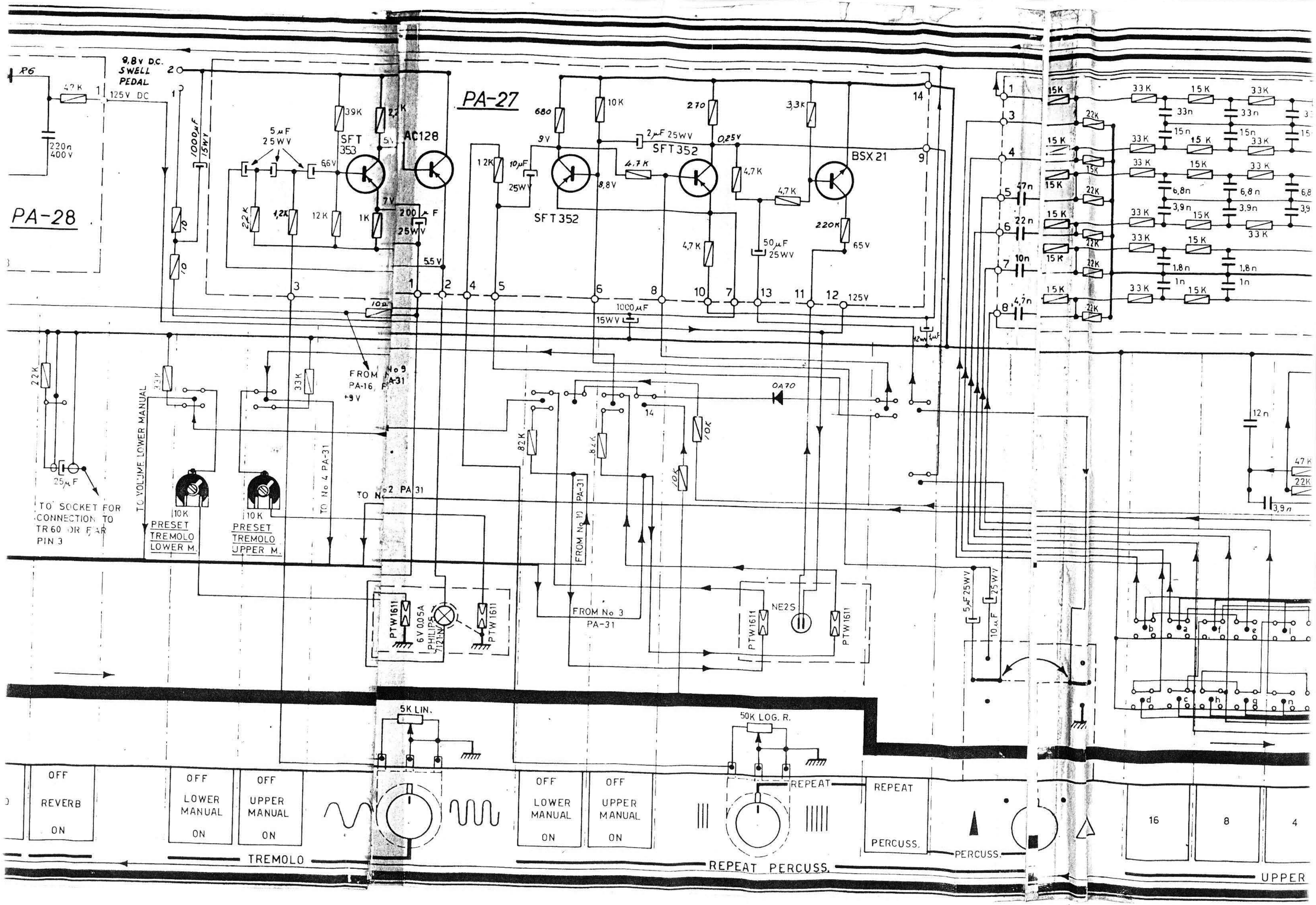
PA-27
PA-28
8,8V D.C. SWELL PEDAL
125V DC
47K
220n 400V
1000μF 15WV
10
10
5μF 25WV
6,6V
22K
1,2K
12K
39K
SFT 353
2,2K
5V
AC128
7V
1K
200μF 25WV
5,5V
12K
10μF 25WV
680
9V
SFT 352
8,8V
10K
2μF 25WV
4,7K
SFT352
270
0,25V
4,7K
4,7K
3,3K
4,7K
BSX 21
50μF 25WV
220K
65V
14
9
1
2
3
4
5
6
8
10
7
13
11
12
125V
1000μF 15WV
12wv 4μF
10p
FROM No 9 PA-31
FROM PA-16, F
+9V
22K
25μF
TO SOCKET FOR CONNECTION TO TR60 OR EAR PIN 3
TO VOLUME LOWER MANUAL
33K
10K PRESET TREMOLO LOWER M.
33K
10K PRESET TREMOLO UPPER M.
TO No 4 PA-31
TO No 2 PA 31
82K
82K
10K
10K
14
OA70
FROM No 11 PA-31
FROM No 3 PA-31
PTW 1611
6V 0,05A PHILIPS 7121-N
PTW 1611
NE2S
PTW 1611
PTW 1611
5K LIN.
50K LOG. R.
15K
33K
15K
33K
22K
33n
15n
47n
22n
10n
4,7n
6,8n
3,9n
1,8n
1n
12n
47K
22K
3,9n
5μF 25WV
10μF 25WV
b
a
f
e
l
d
c
h
g
n
OFF REVERB ON
OFF LOWER MANUAL ON
OFF UPPER MANUAL ON
TREMOLO
OFF LOWER MANUAL ON
OFF UPPER MANUAL ON
REPEAT
REPEAT PERCUSS.
PERCUSS.
REPEAT PERCUSS.
16
8
4
UPPER

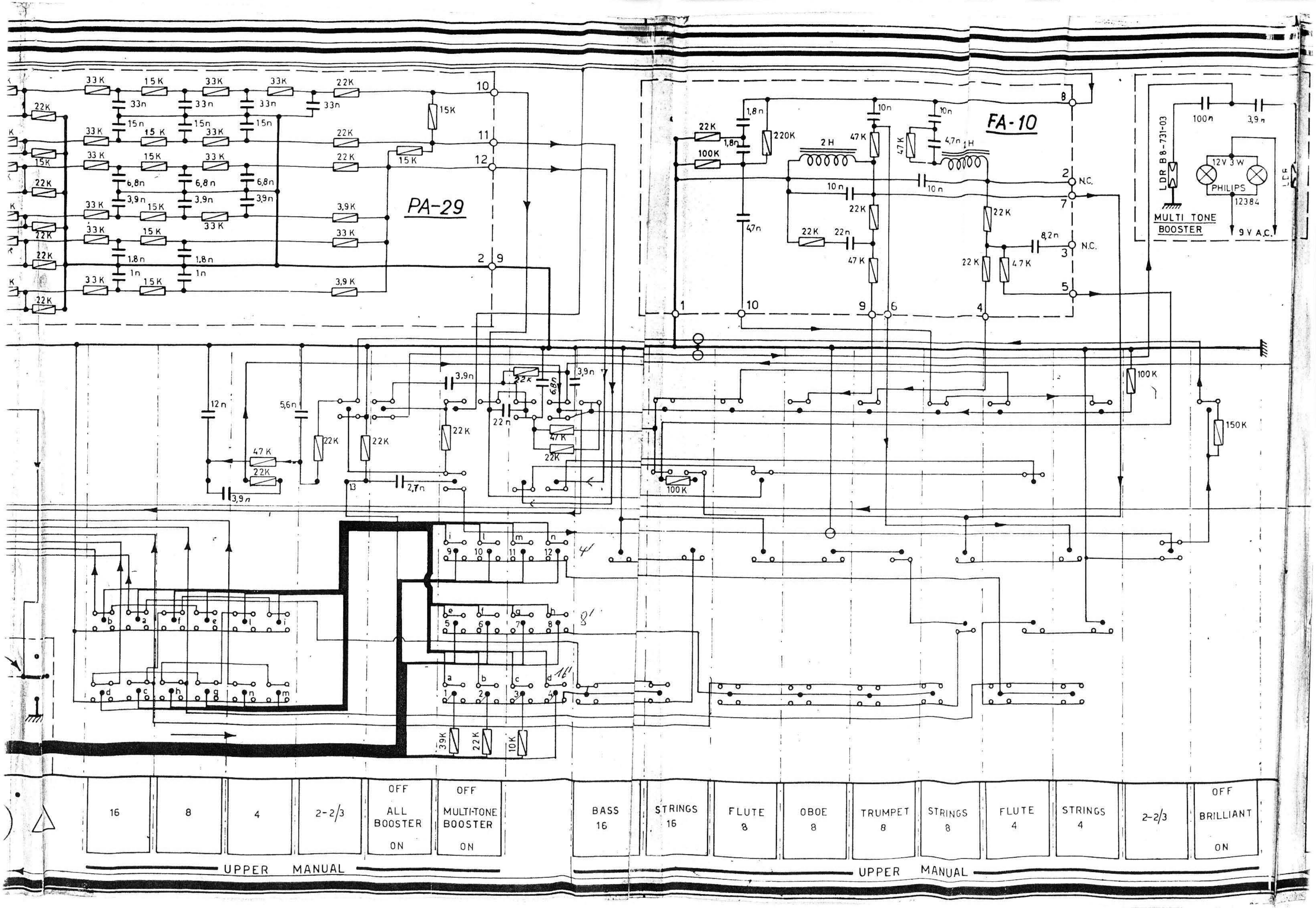
PA-29
FA-10
MULTI TONE BOOSTER
LDR B8-731-03
PHILIPS 12384
12V 3W
9 V A.C.
100n
3,9n
N.C.
2H
1H
220K
100K
150K
47K
22K
33K
15K
3,9K
33n
15n
6,8n
3,9n
1,8n
1n
10n
4,7n
8,2n
47n
22n
12n
5,6n
2,7n
39K
10K
4'
8'
16'
16
8
4
2-2/3
OFF
ALL BOOSTER
ON
OFF
MULTI-TONE BOOSTER
ON
BASS 16
STRINGS 16
FLUTE 8
OBOE 8
TRUMPET 8
STRINGS 8
FLUTE 4
STRINGS 4
2-2/3
OFF
BRILLIANT
ON
UPPER MANUAL
UPPER MANUAL

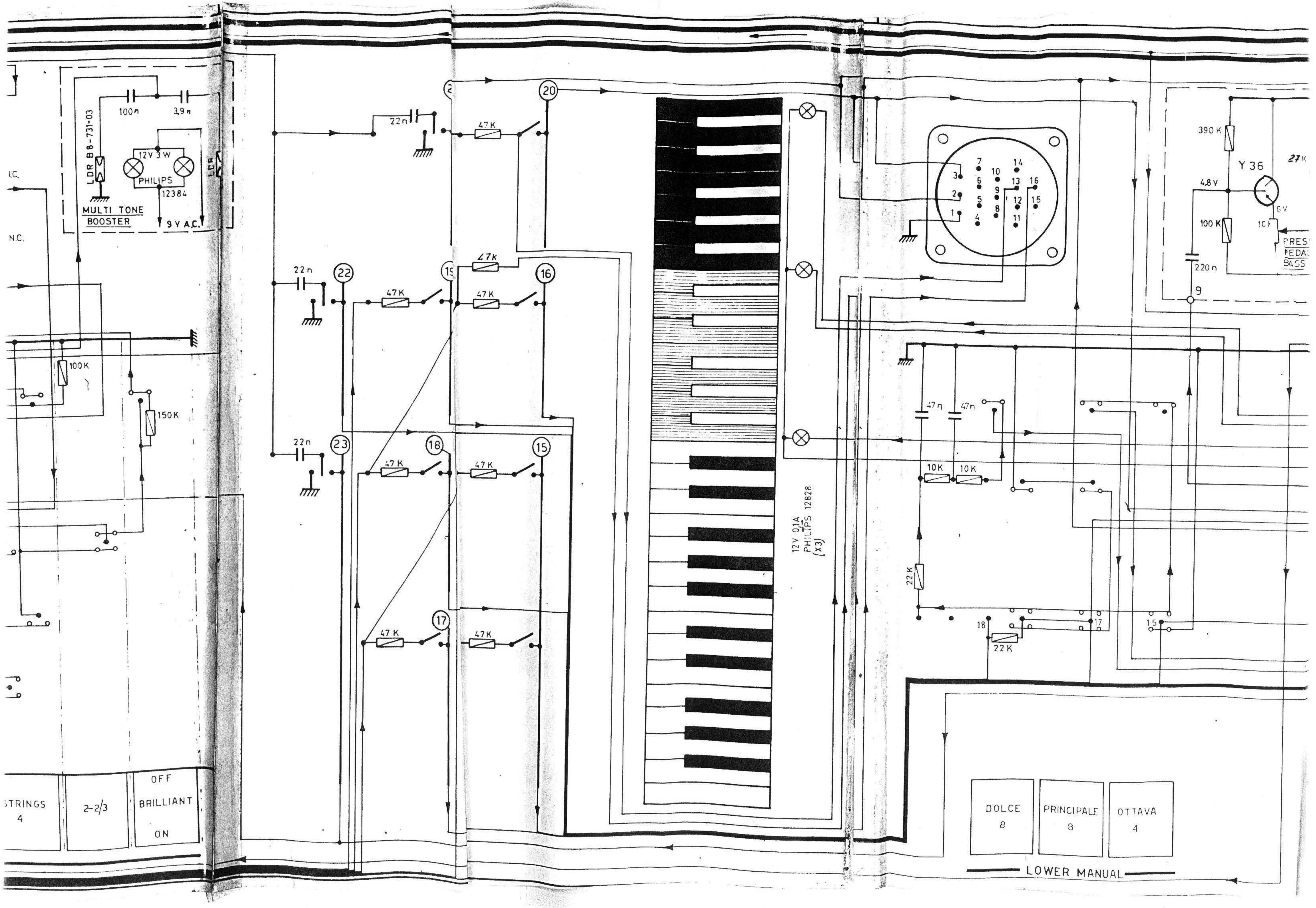

I.C.
N.C.
LDR B8-731-03
100n
3,9n
12V 3W
PHILIPS
12384
MULTI TONE
BOOSTER
9 V A.C.
LDR
100 K
150K
STRINGS
4
2-2/3
OFF
BRILLIANT
ON
22n
47 K
22n
22
47 K
19
47 K
16
22n
23
47 K
18
47 K
15
47 K
17
47 K
20
12V 0,1A
PHILIPS 12828
(X3)
7
14
10
3
6
13
16
9
2
5
12
15
8
1
4
11
390 K
Y 36
27K
4,8 V
6V
100 K
10 F
PRES
PEDAL
BASS
220 n
9
47n
47n
10 K
10 K
22 K
18
22 K
17
15
DOLCE
8
PRINCIPALE
8
OTTAVA
4
LOWER MANUAL

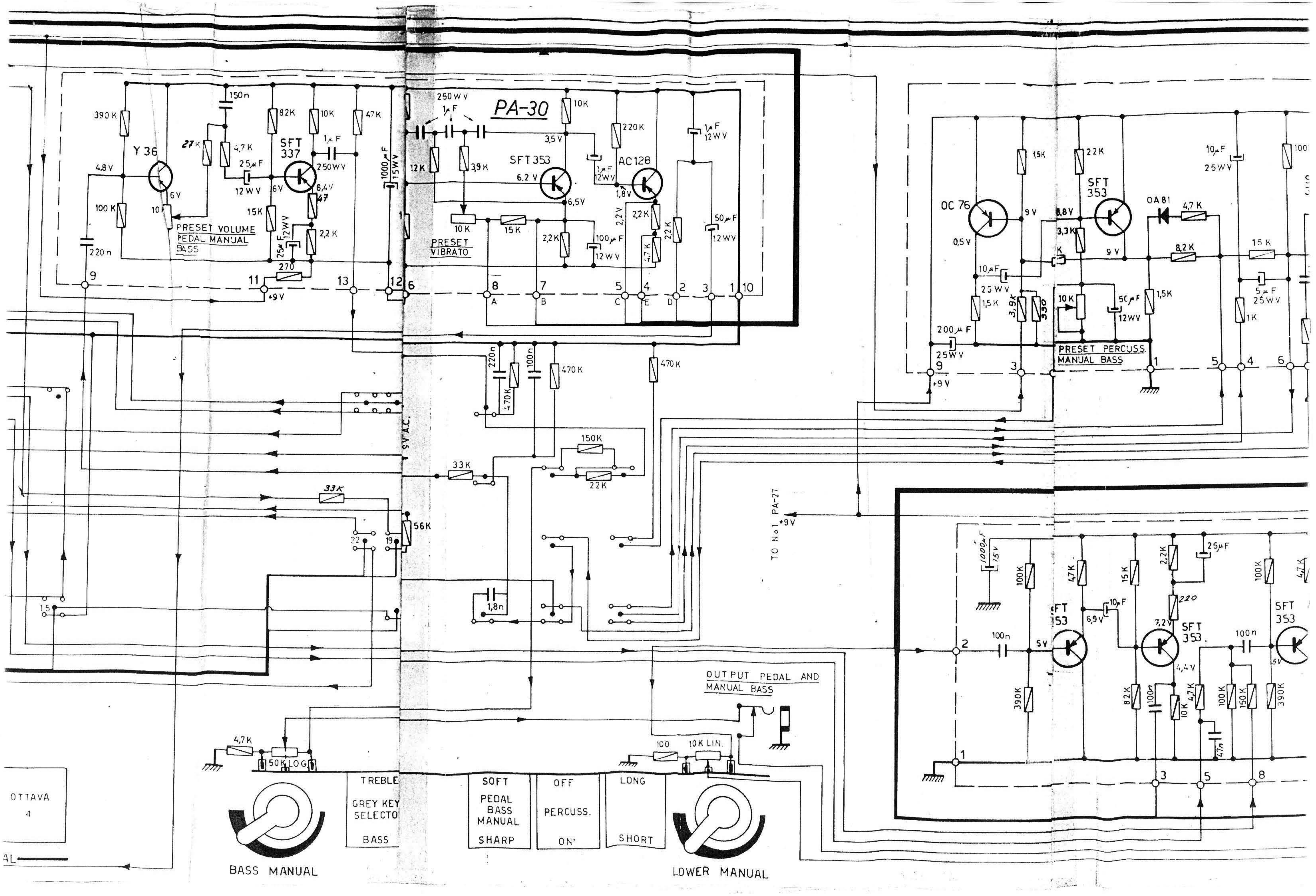
390 K
150n
82K
10K
47K
Y 36
27K
4,7 K
SFT 337
1μF
4,8 V
25μF
12 W V
6V
250WV
6,4V
47
100 K
10K
15K
6V
PRESET VOLUME PEDAL MANUAL BASS
2,2 K
220 n
25μF 12WV
270
9
11
+9 V
13
12
6
1000μF 15WV
12 K
250 W V
1μF
PA-30
10K
3,9 K
SFT 353
3,5 V
6,2 V
220K
AC 128
1μF 12WV
1μF 12WV
1,8 V
6,5V
2,2 K
10 K
15K
PRESET VIBRATO
2,2K
2,2 V
4,7 K
50μF 12WV
100μF 12WV
8
7
5
4
2
3
1
10
A
B
C
E
D
220n
470K
100n
470 K
470K
9V A.C.
150K
33K
22K
33K
56K
22
19
1,8n
1,5
TO No1 PA-27 +9V
OUTPUT PEDAL AND MANUAL BASS
4,7K
50K LOG
100
10K LIN.
OTTAVA 4
AL
TREBLE
GREY KEY SELECTO
BASS
SOFT
PEDAL BASS MANUAL
SHARP
OFF
PERCUSS.
ON
LONG
SHORT
BASS MANUAL
LOWER MANUAL
OC 76
15K
22K
SFT 353
10μF 25WV
100
9 V
8,8 V
0,5 V
3,3 K
OA 81
4,7 K
9 V
8,2 K
15 K
10μF 25WV
1,5 K
3,9K
330
10 K
50μF 12WV
1,5K
5μF 25WV
1K
200μF 25WV
PRESET PERCUSS. MANUAL BASS
9
+9 V
3
1
5
4
6
1000μF 15V
100K
47K
15K
2,2K
25μF
100K
4,7K
10μF
220
SFT 353
SFT 353
6,9 V
7,2 V
SFT 353
2
100n
5V
100n
5V
4,4 V
390K
82K
100n
10K
4,7K
100K
150K
390K
47n
1
3
5
8

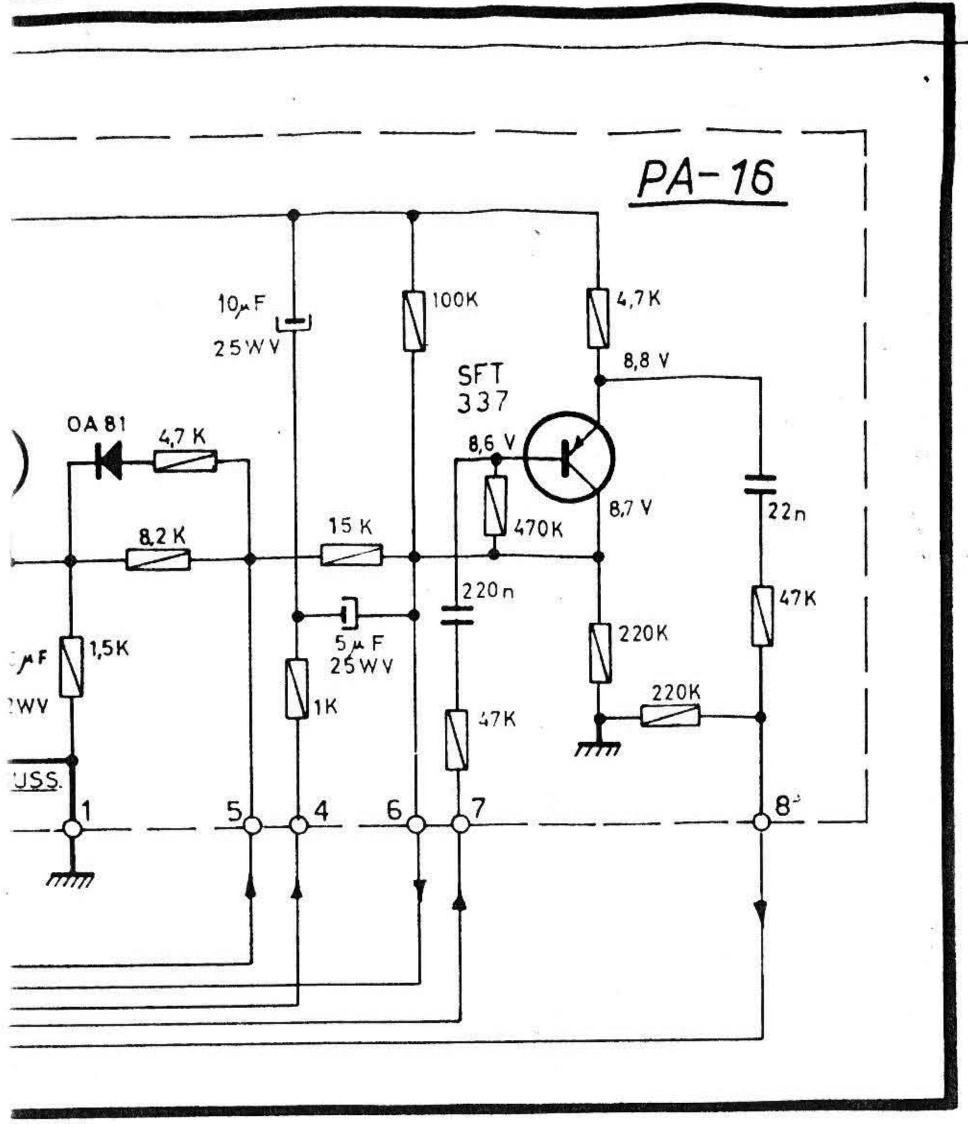
PA-16
OA 81
4,7 K
8,2 K
1,5K
15 K
10μF
25WV
5μF
25WV
1K
100K
SFT
337
8,6 V
470K
220n
47K
4,7K
8,8 V
8,7 V
220K
220K
22n
47K
USS.
1
5
4
6
7
8

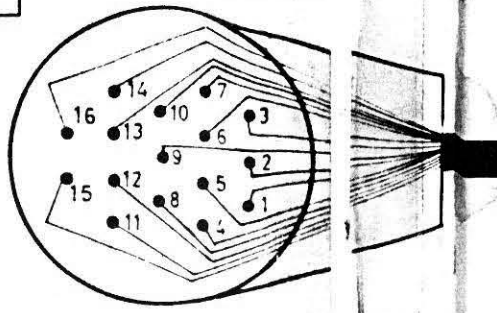
16
15
14
13
12
11
10
9
8
7
6
5
4
3
2
1

PIN No	TONE	COLOR CODE
4	C	GREY
5	C#	WHITE
6	D	TRANSPARENT
7	D#	PINK
8	E	BLACK
9	F	BROWN
10	F#	RED
11	G	ORANGE
12	G#	YELLOW
13	A	GREEN
14	A#	LIGHT BLUE
15	B	BLUE
16	C	VIOLET

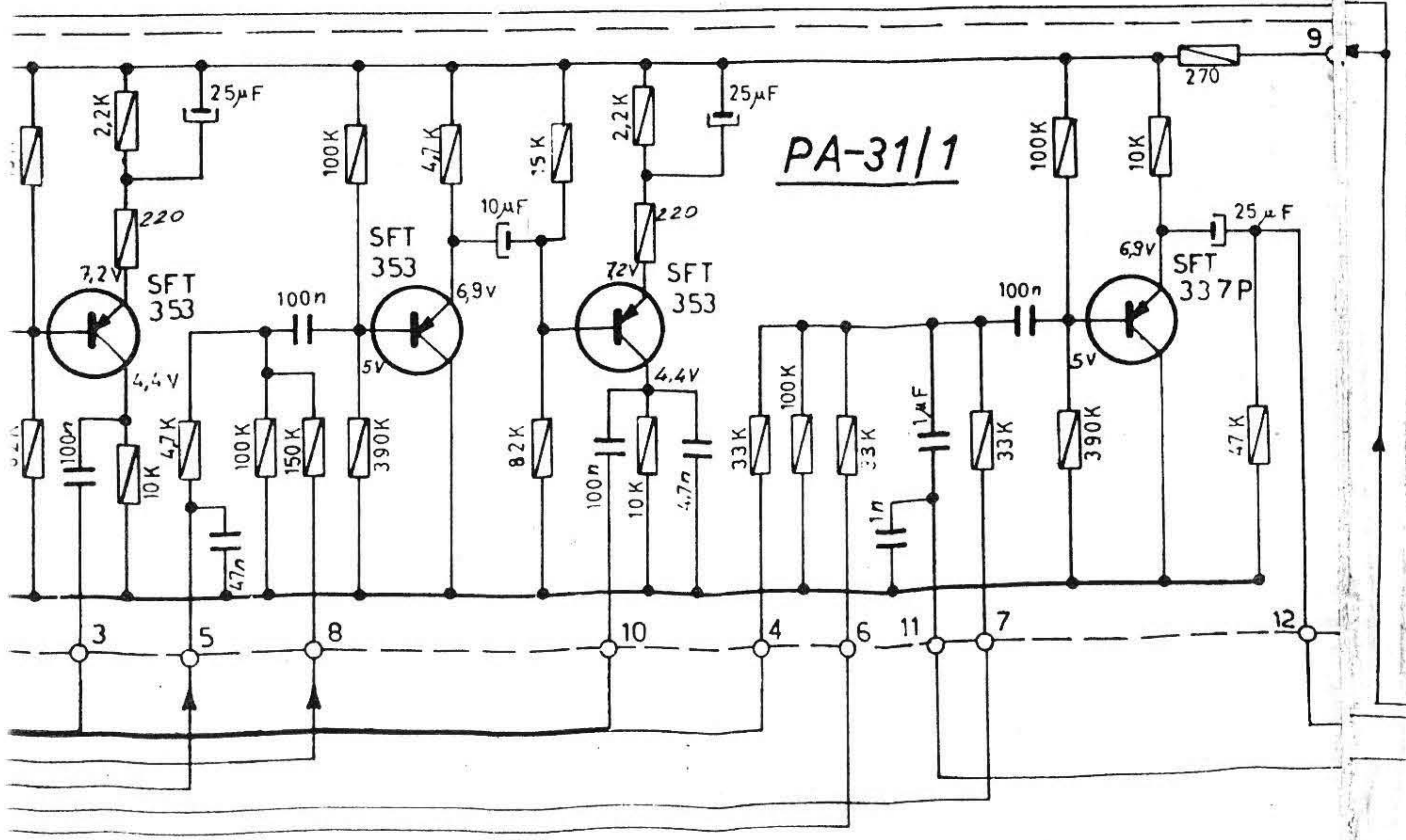
PA-31/1
2,2K
25μF
220
7,2V
SFT
353
4,4V
100n
10K
4,7K
47n
100K
150K
100n
SFT
353
6,9V
5V
390K
100K
4,7K
10μF
15K
82K
2,2K
25μF
220
7,2V
SFT
353
4,4V
100n
10K
4,7n
33K
100K
33K
1μF
1n
33K
100n
100K
10K
270
6,9V
SFT
337P
5V
390K
25μF
47K
9
3
5
8
10
4
6
11
7
12

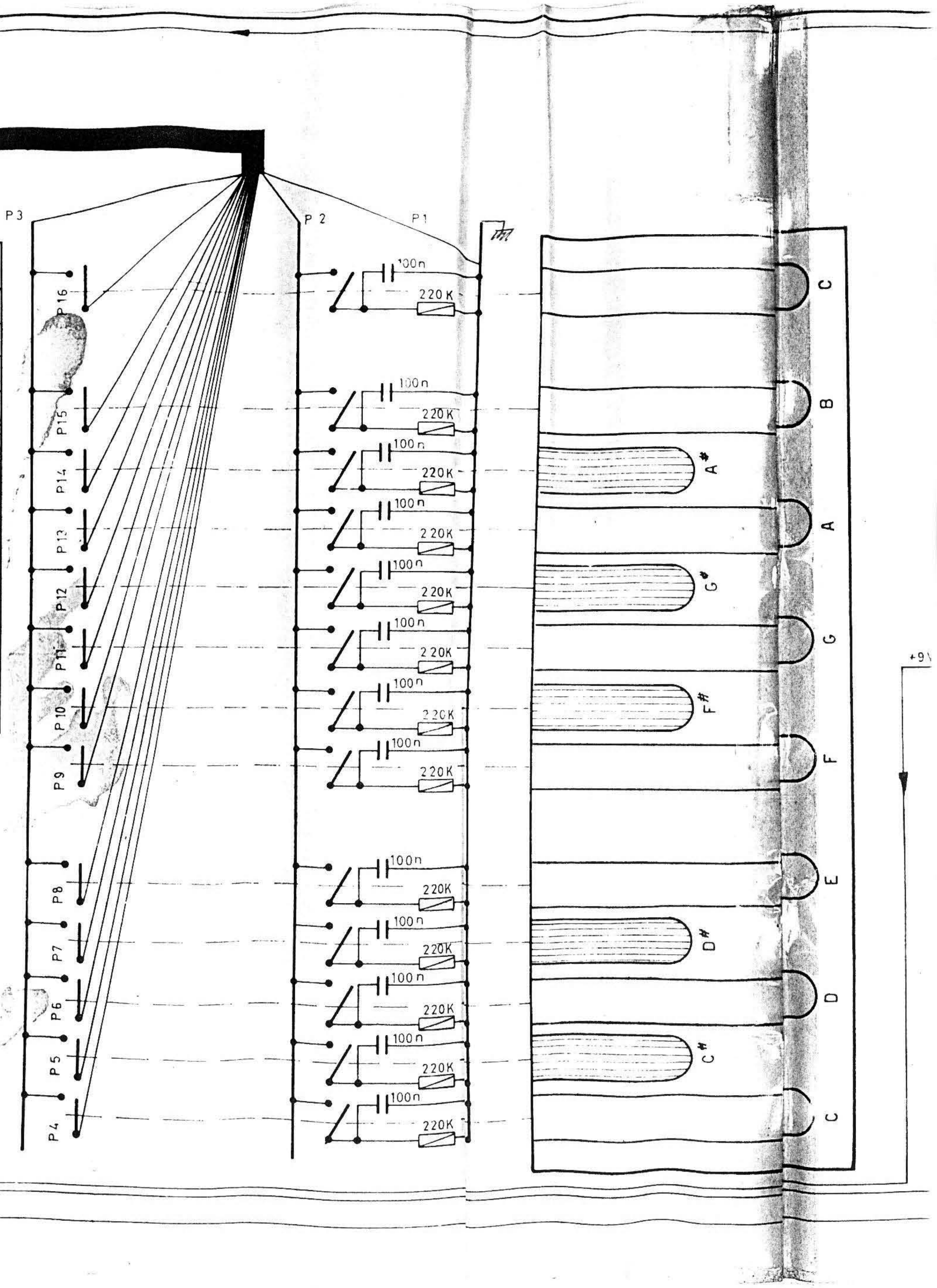
P3
P2
P1
P16
P15
P14
P13
P12
P11
P10
P9
P8
P7
P6
P5
P4
100n
220K
C
B
A#
A
G#
G
F#
F
E
D#
D
C#
C
+9V

		C	C 1A	C 1B	C 2A	C 2B	C 3A	C 3B	C 4A	C 4B	C 5A	C 5B	C 6A	C 6B
C	DO	7.5n	5.6n	6.8n	[illegible]	12n	22n	27n	39n	47n	82n	100n	150n	170n
C#	DO#	16n	[illegible]	12n	22n	27n	39n	39n	82n	82n	150	150n		
D	RE	14,7n	10n	10n	18n	22n	39n	39n	68n	82n	1·50n	150n		
D#	RE#	13n	8.2n	10n	16n	22n	39n	39n	68n	82n	150n	150n		
E	MI	11,2n	6,2n	10n	18n	22n	33n	39n	68n	82n	120n	150n		
F	FA	10n	8.2n	10n	15n	18n	33n	39n	68n	68n	120n	150n		
F#	FA#	9n	6,8n	10n	15n	18n	27n	33n	56n	68n	120n	120n		
G	SOL	7,8n	6.8n	10n	12n	15n	27n	33n	56n	68n	100n	120n		
G#	SOL#	7.1n	6.8n	8,2n	12n	15n	27n	33n	56n	68n	100n	100n		
A	LA	5,9n	5.6n	8,2n	12n	15n	22n	33n	47n	68n	100n	100n		
A#	LA#	10n	5,6n	6,8n	10n	12n	22n	33n	47n	56n	82n	100n		
B	SI	8,3n	5.6n	6.8n	10n	12n	22n	27n	47n	47n	82n	100n		

VALUES OF G10 GENERATOR BOARDS' DIVIDERS

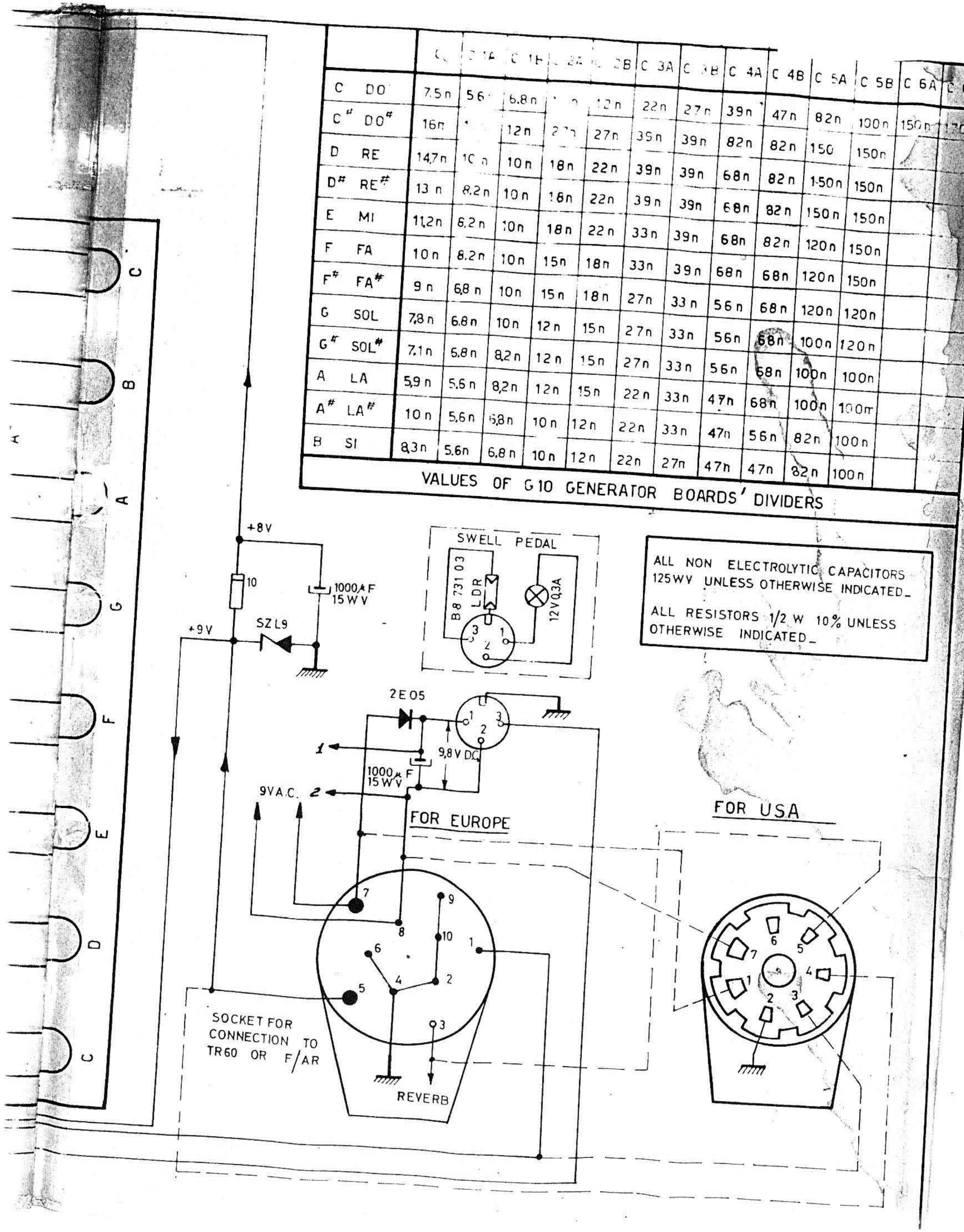
C
B
A
G
F
E
D
C
+8V
10
1000µF
15WV
+9V
SZL9
SWELL PEDAL
B8 731 03
LDR
12V 0,3A
3
2
1
2E05
1
2
3
9,8V DC
1000µF
15WV
1
9VA.C.
2
FOR EUROPE
FOR USA
7
9
8
10
1
6
4
2
5
3
SOCKET FOR CONNECTION TO TR60 OR F/AR
REVERB
6
7
5
4
1
2
3

ALL NON ELECTROLYTIC CAPACITORS 125WV UNLESS OTHERWISE INDICATED_

ALL RESISTORS 1/2 W 10% UNLESS OTHERWISE INDICATED_

Graul

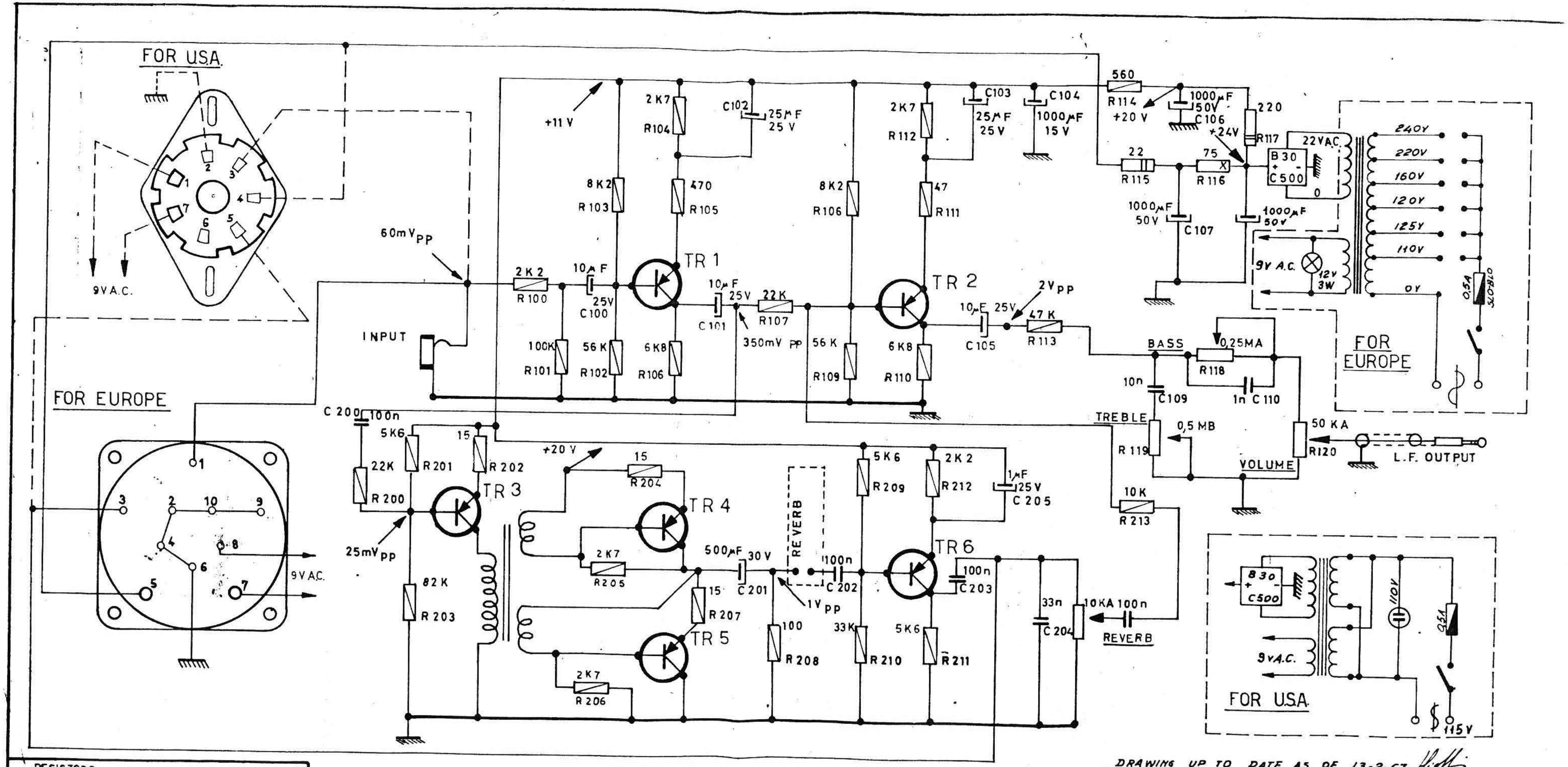
FOR USA
9V A.C.
FOR EUROPE
9V A.C.
INPUT
60mV PP
+11 V
2K2
R100
10µF
25V
C100
100K
R101
56K
R102
8K2
R103
2K7
R104
470
R105
6K8
R106
TR 1
C102
25µF
25 V
10µF
25V
C101
350mV PP
22K
R107
8K2
R106
56K
R109
2K7
R112
47
R111
6K8
R110
TR 2
C103
25µF
25V
C104
1000µF
15 V
10µF 25V
C105
2VPP
47K
R113
560
R114
+20 V
1000µF
50V
C106
+24V
220
R117
22
R115
75
R116
1000µF
50V
C107
1000µF
50V
B30
C500
22VA.C.
0
240V
220V
160V
120V
125V
110V
0V
9V A.C.
12V
3W
0.5A
SCOBLO
FOR EUROPE
BASS
0,25MA
R118
10n
C109
1n C110
TREBLE
0,5 MB
R119
50 KA
R120
VOLUME
L.F. OUTPUT
C 200
100n
5K6
R201
15
R202
22K
R200
TR3
25mV PP
82K
R203
+20 V
15
R204
TR 4
2K7
R205
15
R207
TR 5
2K7
R206
500µF 30V
C201
1VPP
100
R208
REVERB
100n
C202
5K6
R209
33K
R210
2K2
R212
1µF
25V
C205
TR6
100n
C203
5K6
R211
33n
C204
10KA
100n
REVERB
10K
R213
B30
C500
110V
0,5A
9V A.C.
115V
FOR USA
1
2
3
4
5
6
7
8
9
10

DRAWING UP TO DATE AS OF 13-2-67

RESISTORS	
	1/2 W
	2 W
X	10 W
XX	20 W

CAPACITORS	
⊣⊢	125 V

TR1 ; TR2 ; TR6 = SFT337 p.v.

TR3 ; TR4 ; TR5 = SFT367 p.v. (AC153 AC128)

DWG No	FARFISA SpA CAMERANO — ANCONA
SE — 41	Power Supply and Reverb for "TRANSICORD and COMPACT DUO"
	66/5